A651

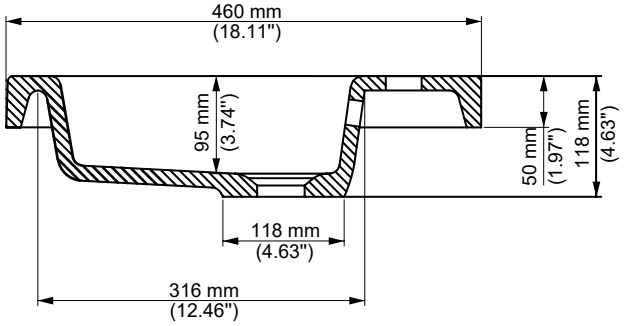
460 mm
(18.11")
95 mm
(3.74")
50 mm
(1.97")
118 mm
(4.63")
118 mm
(4.63")
316 mm
(12.46")

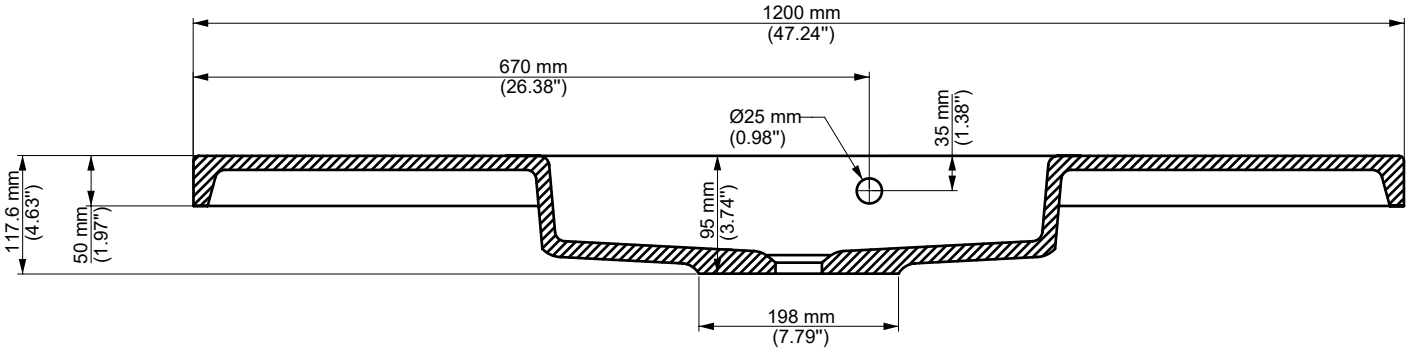
1200 mm
(47.24")
670 mm
(26.38")
Ø25 mm
(0.98")
35 mm
(1.38")
117.6 mm
(4.63")
50 mm
(1.97")
95 mm
(3.74")
198 mm
(7.79")

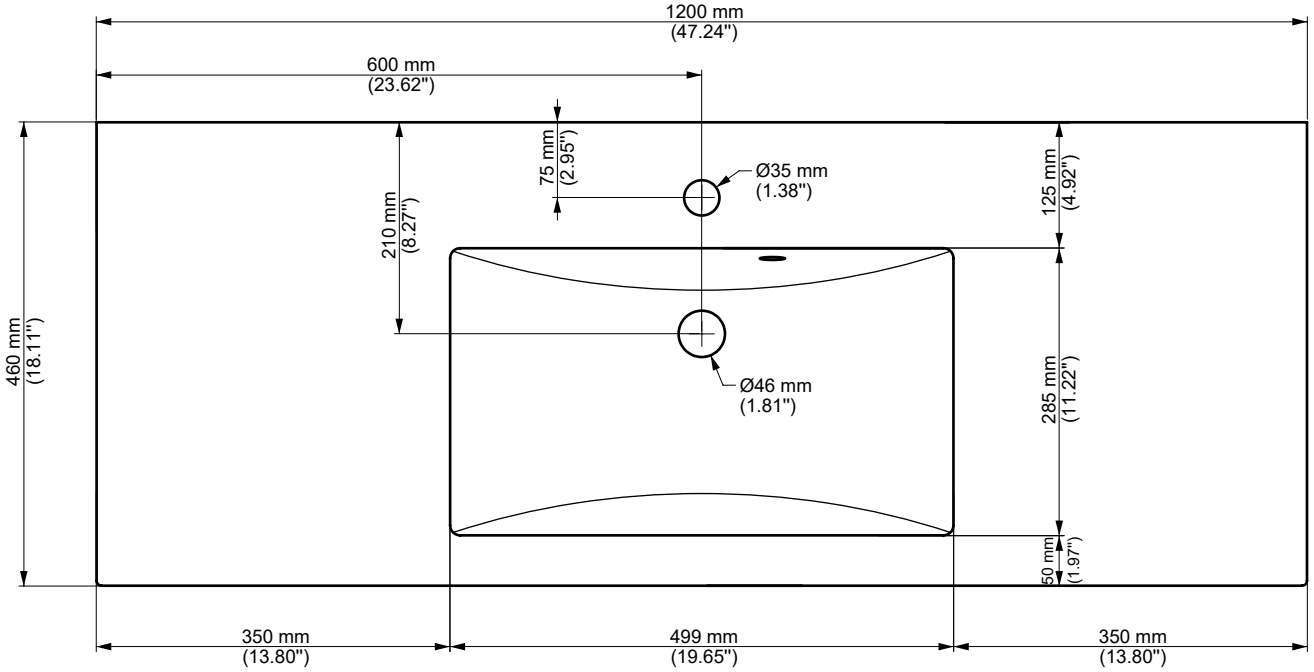
1200 mm
(47.24")
600 mm
(23.62")
75 mm
(2.95")
Ø35 mm
(1.38")
125 mm
(4.92")
210 mm
(8.27")
460 mm
(18.11")
Ø46 mm
(1.81")
285 mm
(11.22")
50 mm
(1.97")
350 mm
(13.80")
499 mm
(19.65")
350 mm
(13.80")